Common Drain Amplifier (source Follower)

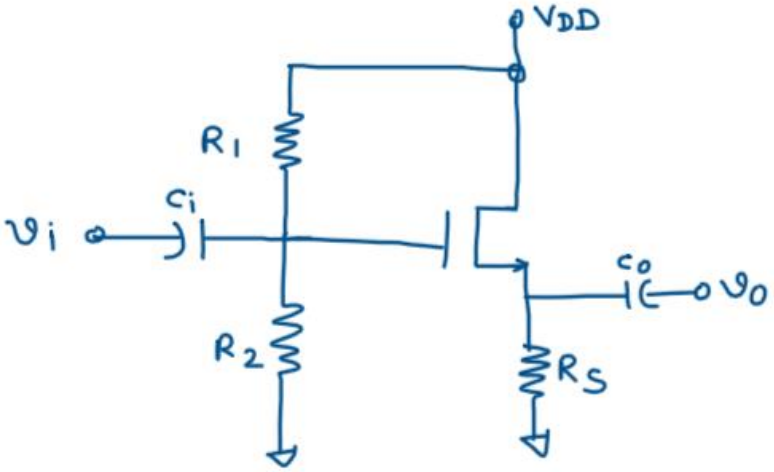

Small-Signal Equivalent circuit

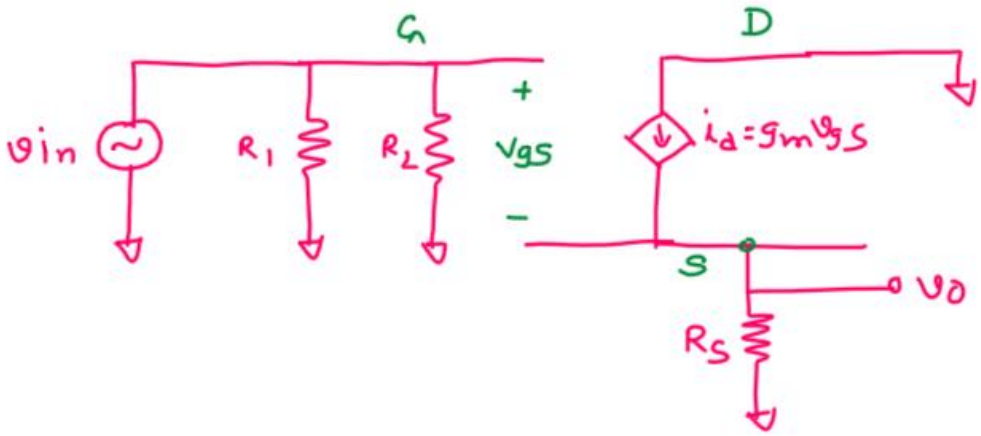

Input Impedance:

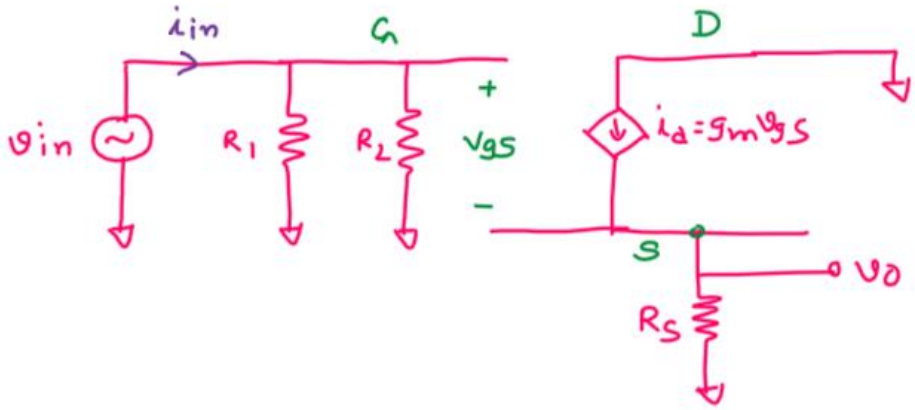

Input impedance $Z_{in} = \dfrac{v_{in}}{i_{in}} = R_1 \| R_2$

Typically, R_1 and R_2 are in $M\Omega$, so input impedance of source follower is very high.

Voltage Gain (A_v):

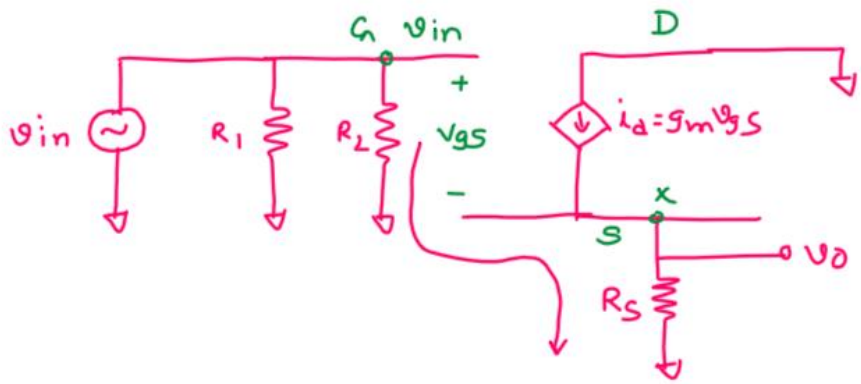

Applying KVL it can be written as

$$v_{in} - v_{gs} - v_o = 0 \Rightarrow v_{gs} = v_{in} - v_o$$

Also, applying KCL at the output node, (node-x)

$$\frac{v_o}{R_S} = g_m v_{gs} = g_m (v_{in} - v_o)$$

$$\Rightarrow \frac{v_o}{R_S} + g_m v_o = g_m v_{in}$$

$$\Rightarrow \frac{v_o}{v_{in}} = A_v = \frac{g_m R_S}{1 + g_m R_S} \quad \text{---- (1)}$$

→ The voltage gain of the source follower is always less than 1.

Rearranging eq (1)

$$A_v = \frac{R_S}{\frac{1}{g_m} + R_S}$$

It means, voltage gain is the resistance seen between source and ground, divided by $1/g_m$ plus resistance seen between source and ground.

⇒ · Voltage gain with finite output resistance of the MOSFET:

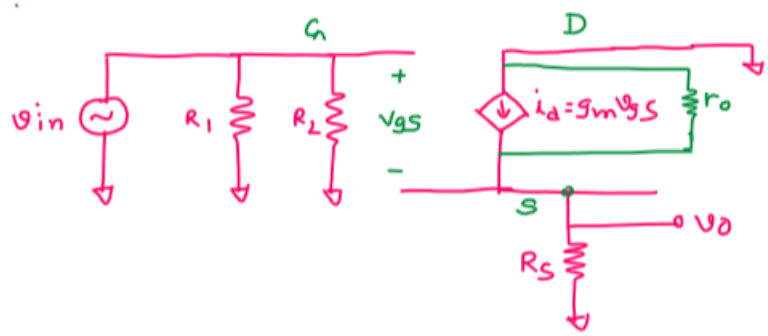

When $\lambda \neq 0$, a finite output resistance r_o will appear between drain and source.

Since, drain is at AC ground, r_o will appear between source and ground.

Therefore voltage gain:

$$A_v = \frac{R_S \| r_o}{\frac{1}{g_m} + (R_S \| r_o)} \quad \text{or} \quad A_v = \frac{g_m (R_S \| r_o)}{1 + g_m (R_S \| r_o)}$$

output impedance of source follower:

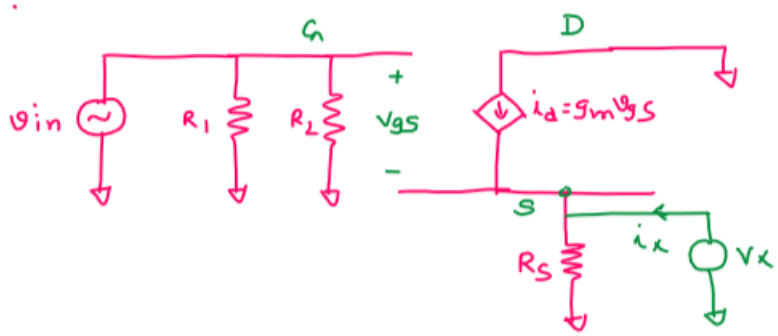

To, find the output impedance, let's apply a test voltage and find a test current by considering all the independent sources in the circuit as zero.

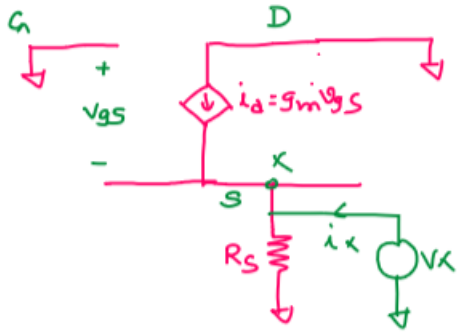

ALL ABOUT ELECTRONICS

Source Follower

In the equivalent circuit,

$$v_{gs} = -V_x$$

Now, applying KCL at node, X

$$i_d + i_x = \frac{V_x}{R_S}$$

$$\Rightarrow g_m v_{gs} + i_x = \frac{V_x}{R_S}$$

$$\Rightarrow i_x = \frac{V_x}{R_S} - g_m v_{gs}$$

$$\Rightarrow i_x = \frac{V_x}{R_S} + g_m V$$

$$\Rightarrow \frac{i_x}{V_x} = \frac{1}{R_S} + g_m = \frac{1}{R_S} + \frac{1}{(1/g_m)}$$

$$\Rightarrow \frac{1}{Z_0} = \frac{1}{R_S} + \frac{1}{(1/g_m)}$$

$$\Rightarrow Z_0 = R_S \| (1/g_m)$$

with finite output resistance of MOSFET the output impedance

$$Z_o = R_S \| r_o \| (1/g_m)$$

The output impedance of source follower is low. (Typically tens of ohm)

In summary:

$$Z_i = R_1 \| R_2$$

$$A_v = \frac{R_S \| r_o}{\frac{1}{g_m} + (R_S \| r_o)}$$

$$Z_o = R_S \| r_o \| (1/g_m)$$